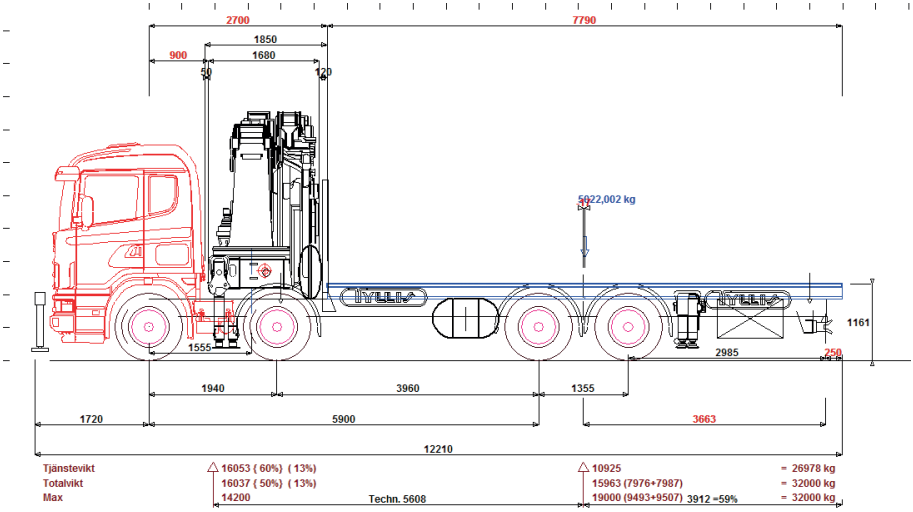
2700
7790
1850
900
1680
50
120
5022,002 kg
1161
1555
2985
250
1940
3960
1355
1720
5900
3663
12210
Tjänstevikt
16053 (60%) (13%)
10925
= 26978 kg
Totalvikt
16037 (50%) (13%)
15963 (7976+7987)
= 32000 kg
Max
14200
Techn. 5608
19000 (9493+9507) 3912 =59%
= 32000 kg